Assembly Pneumatic Cylinder Kits:

a) DNC ISO6431 standard cylinder kits

Ordering Code:

DNC - 50

↑ Cylinder type

↑ Bore of cylinder Φ32~125mm

Material list:

Model/ Specification	Part name	Malerial	Part name	Malerial
DNC Kits (ISO6431&V DMA24562) Bore size: ϕ 32,40, 50,63,80, 100,125	Front cover	Aluminum alloy	Piston seal	NBR
	Back cover	Aluminum alloy	Wear ring	PA66
	Piston	Aluminum alloy	Self lubriacting bearing	PTFE+Brass
	Piston rod(Without)	S45C hard chrome carbon steel	Magnet(optional)	RbFeb
	Barrel(Without)	Hard anodized aluminum	Cushion needle	Brass
	Front Cover seal	PUR	Hexagon screw	Carbon steel
	Cushion seal	NBR	Nut	Carbon steel
	Pision rod O-ring	NBR	Profile bolt	Carbon steel
	Cover O-ring	NBR		

Internal Structure:

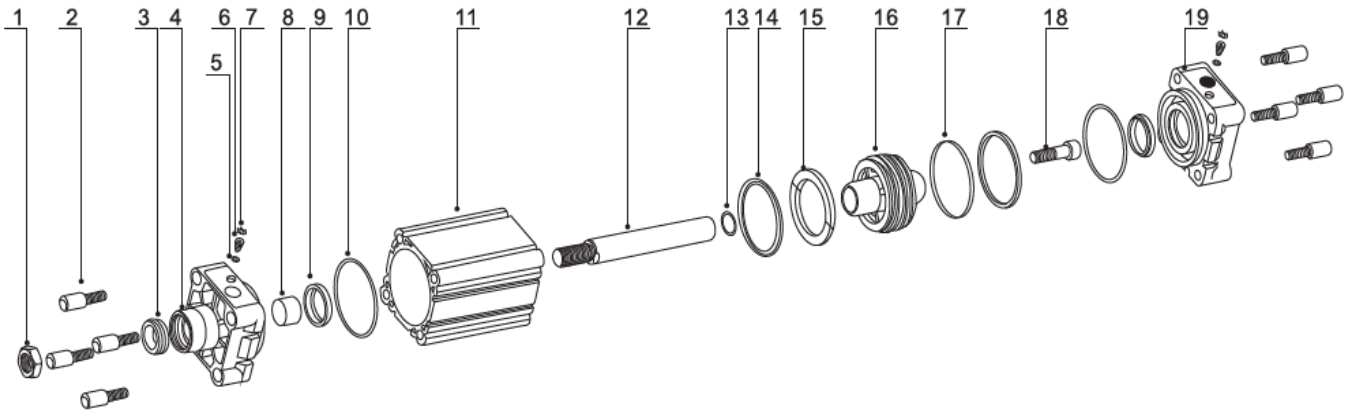

NO	Designation	NO	Designation	NO	Designation	NO	Designation	NO	Designation
1	Nut	5	O-ring	9	Cushion seal	13	Rod O-ring	17	Wear ring
2	Profile bolt	6	Adjustable screw	10	Cover O-ring	14	Piston seal	18	Hex Socket Screw
3	Front Cover seal	7	Block slip	11	Barrel(Without)	15	Magnet(optional)	19	Back cover
4	Front cover	8	Self Lubricating bearing	12	Piston rod(Without)	16	Piston		

b) SI ISO6431 standard cylinder kits

Ordering Code:

SI - 50

↑ Cylinder type

↑ Bore of cylinder Φ32~200mm

Material list:

Model/ Specification	Part name	Malerial	Part name	Malerial
SI Kits (ISO6431) Bore size: ϕ 32,40,50, 63,80,100,125, 160,200	Front cover	Aluminum alloy	Piston seal	NBR
	Back cover	Aluminum alloy	Wear ring	PA66
	Piston	Aluminum alloy	Self lubriacting bearing	PTFE+Brass
	Piston rod(Without)	S45C hard chrome carbon steel	Magnet(optional)	RbFeb
	Barrel(Without)	Hard anodized aluminum	Cushion needle	Brass
	Front Cover seal	NBR	Hexagon screw	Carbon steel
	Cushion seal	NBR	Nut	Carbon steel
	Pision rod O-ring	NBR	Profile bolt	Carbon steel
	Cover O-ring	NBR		

Internal Structure:

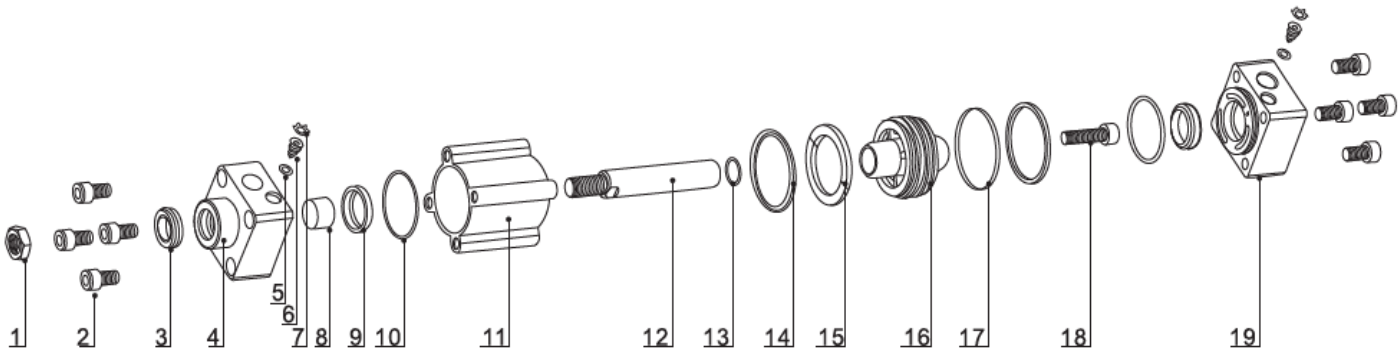

NO	Designation	NO	Designation	NO	Designation	NO	Designation	NO	Designation
1	Nut	5	O-ring	9	Cushion Seal	13	Rod O-ring	17	Wear ring
2	Profile bolt	6	Adjustable screw	10	Cover O-ring	14	Piston seal	18	Hex Socket screw
3	Front Cover seal	7	Block slip	11	Barrel(Without)	15	Magnet(optional)	19	Back cover
4	Front cover	8	Self Lubricating bearing	12	Piston rod(Without)	16	Piston		

c) SC standard cylinder kits

Ordering Code:

SC - 50

↑ Cylinder type

↑ Bore of cylinder Φ32~200mm

Material list:

Model/ Specification	Part name	Malerial	Part name	Malerial
SC Kits Bore size: ϕ 32,40,50, 63,80,100,125, 160,200,	Front cover	Aluminum alloy	Piston seal	NBR
	Back cover	Aluminum alloy	Wear ring	PA66
	Piston	Aluminum alloy	Self lubriacting bearing	PTFE+Brass
	Piston rod(Without)	S45C hard chrome carbon steel	Magnet(optional)	RbFeb
	Barrel(Without)	Hard anodized aluminum	Cushion needle	Brass
	Front Cover seal	NBR	Hexagon screw	Carbon steel
	Cushion seal	NBR	Nut	Carbon steel
	Pision rod O-ring	NBR	Tie-rod nut	Carbon steel
	Cover O-ring	NBR		

Internal Structure:

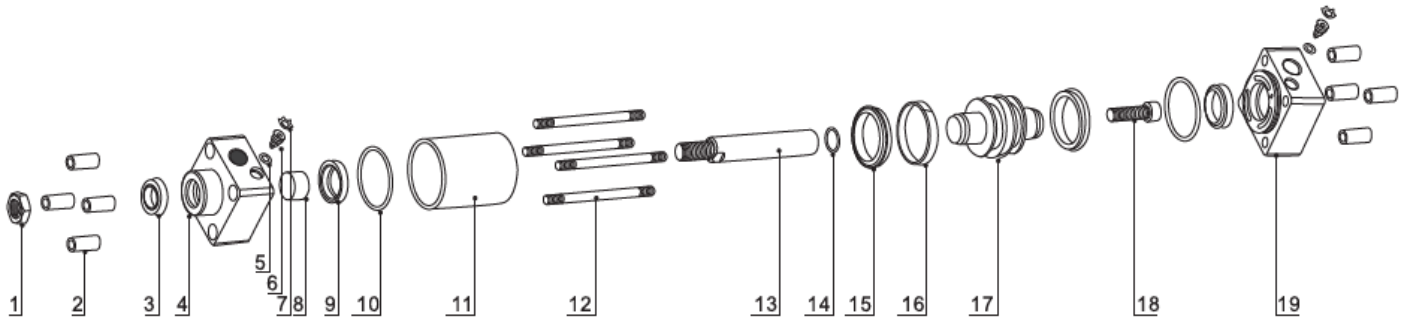

NO	Designation	NO	Designation	NO	Designation	NO	Designation	NO	Designation
1	Nut	5	O-ring	9	Cushion ring	13	Piston rod(Without)	17	Piston
2	Tie-rod nut	6	Adjustable screw	10	Cover O-ring	14	Rod O-ring	18	Hex Socket Screw
3	Front Cover seal	7	Block slip	11	Barrel(Without)	15	Piston seal	19	Back cover
4	Front cover	8	Self Lubricating bearing	12	Tie rod(Without)	16	Wear ring		

d) DSN, MA mini cylinder kits

Ordering Code:

DSN - 25

↑ Cylinder type

↑ Bore of cylinder Φ8~40mm

Material list:

Model/ Specification	Part name	Malerial	Part name	Malerial
MA Kits Bore size: ϕ 16,20,25,32,40 **MA6432 Kits** (ISO6432) Bore size: ϕ 8,10,12, 16,20,25	Front cover	Aluminum alloy	Piston seal	NBR
	Back cover	Aluminum alloy	Wear ring	PA66
	Piston	Aluminum alloy	Self lubriacting bearing	PTFE+Brass
	Piston rod(Without)	S45C hard chrome carbon steel	Magnet(optional)	RbFeb
	Barrel(Without)	Stainless Steel	Cushion needle	Brass
	Front Cover seal	NBR	Hexagon screw	Carbon steel
	Cushion seal	NBR	Nut	Carbon steel
	Pistion rod O-ring	NBR		
	Cover O-ring	NBR		

Internal Structure:

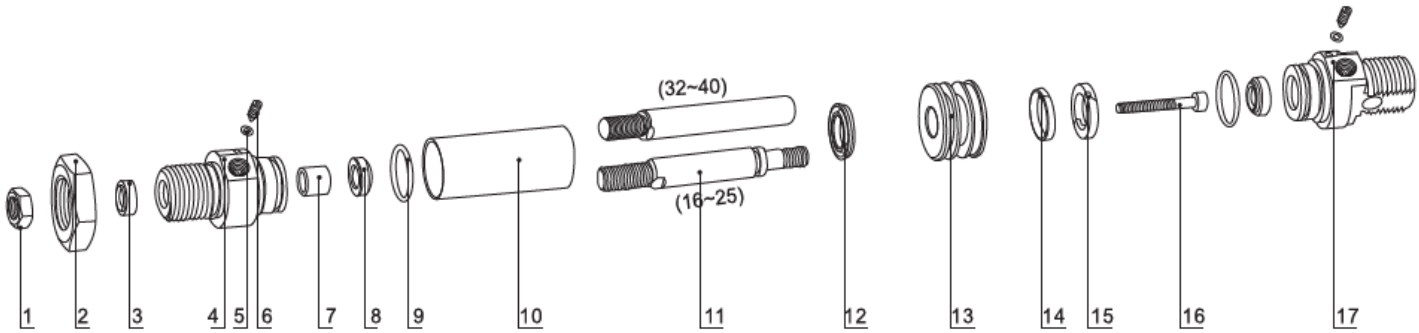

NO	Designation	NO	Designation	NO	Designation	NO	Designation	NO	Designation
1	Rod nut	5	O-ring	9	Cover O-ring	13	Piston	17	Back cover
2	Cover Nut	6	Adjustable screw	10	Barrel(Without)	14	Wear ring		
3	Front Cover seal	7	Self Lubricating bearing	11	Piston rod(Without)	15	Magnet(optional)		
4	Front cover	8	Cushion ring	12	Piston seal	16	Hexagon Screw		

e) MAL mini cylinder kits

Ordering Code:

MAL - 25

↑ Cylinder type

↑ Bore of cylinder Φ16~40mm

Material list:

Model/ Specification	Part name	Malerial	Part name	Malerial
MAL Kits Bore size: ϕ 16,20, 25,32,40	Front cover	Aluminum alloy	Piston seal	NBR
	Back cover	Aluminum alloy	Wear ring	PA66
	Piston	Aluminum alloy	Self lubriacting bearing	PTFE+Brass
	Piston rod(Without)	S45C hard chrome carbon steel	Magnet(optional)	RbFeb
	Barrel(Without)	Hard anodized aluminum	Cushion needle	Brass
	Anti-bump cushion	NBR	Hexagon screw	Carbon steel
	Front Cover seal	NBR	Nut	Carbon steel
	Cover O-ring	NBR	Muffler	Cu

Internal Structure:

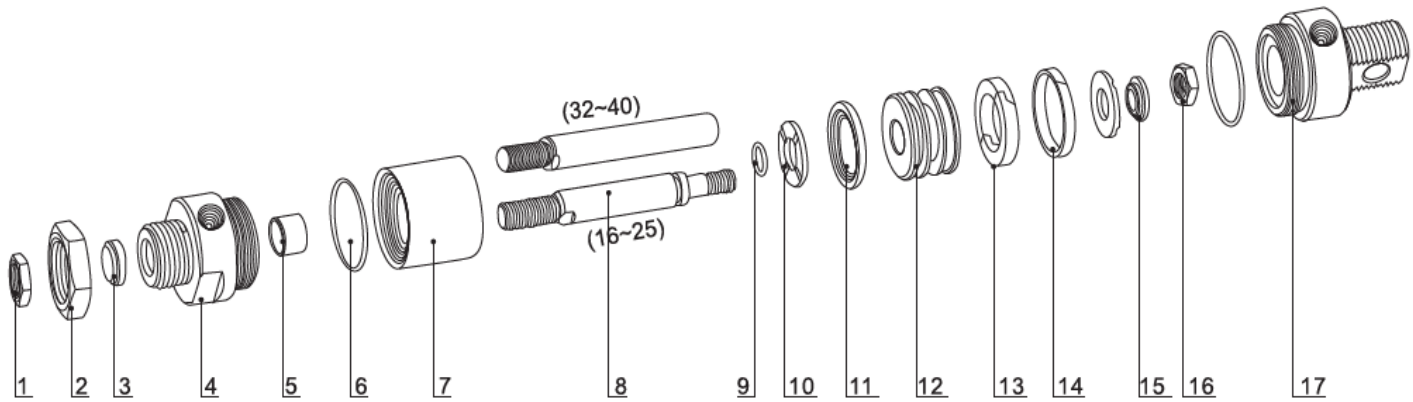

NO	Designation	NO	Designation	NO	Designation	NO	Designation	NO	Designation
1	Rod nut	5	Self Lubricating bearing	9	Rod O-ring	13	Magnet(optional)	17	Back cover
2	Cover Nut	6	Cover O-ring	10	Anti-bump cushion	14	Wear ring		
3	Front Cover seal	7	Barrel(Without)	11	Pistion seal	15	Impact gasket		
4	Front cover	8	Piston rod(Without)	12	Piston	16	Nut		

f) SDA compact cylinder kits

Ordering Code:

SDA - 40

↑ Cylinder type

↑ Bore of cylinder Φ12~100mm

Material list:

Model/ Specification	Part name	Malerial	Part name	Malerial
SDA Kits Bore size: ϕ 12,16,20, 25,32,40, 50,63,80,100	Front cover	Aluminum alloy	Piston seal	NBR
	Back cover	Aluminum alloy	Self lubriacting bearing	PTFE+Brass
	Piston	Aluminum alloy	Magnet(optional)	RbFeb
	Piston rod(Without)	S45C hard chrome carbon steel	C type buckle	Steel
	Barrel(Without)	Hard anodized aluminum	Nut	Carbon steel
	Anti-bump cushion	NBR	Muffler	Cu
	Cover O-ring	NBR		

Internal Structure:

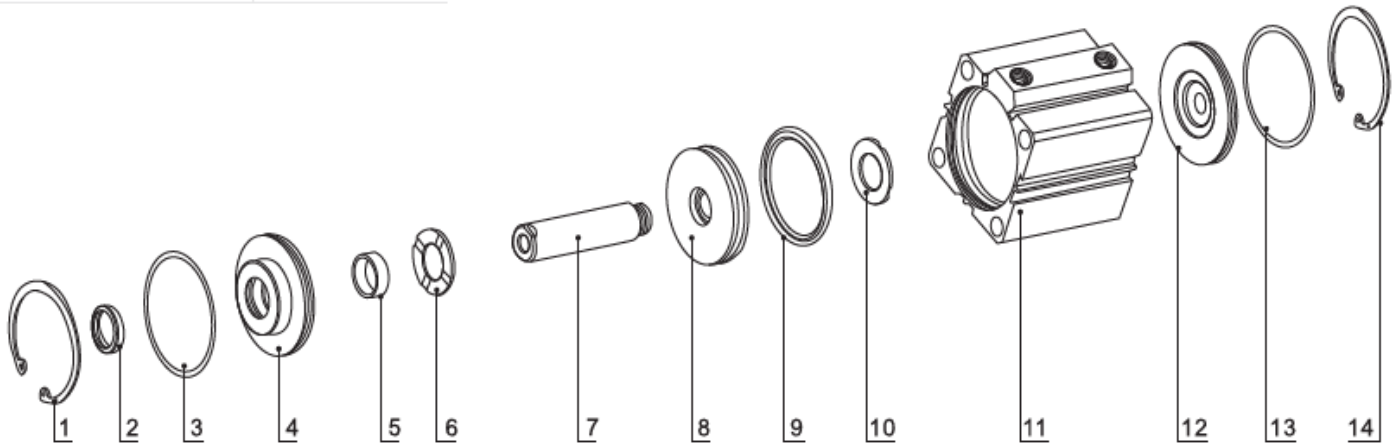

NO	Designation	NO	Designation	NO	Designation	NO	Designation	NO	Designation
1	C type buckle	4	Front cover	7	Piston rod(Without)	10	Anti-bump cushion	13	Cover O-ring
2	Front cover seal	5	Self Lubricating bearing	8	Piston	11	Barrel(Without)	14	C type buckle
3	Cover O-ring	6	Anti-bump cushion	9	Piston Seal	12	Back cover		